Read Me

SteelForce Inverted Pro Pedals

Hydraulic Damper & Haptic Ready

Premium CAD Plans for Load Cell Pedals DIY Project

By DIY Sim Studio

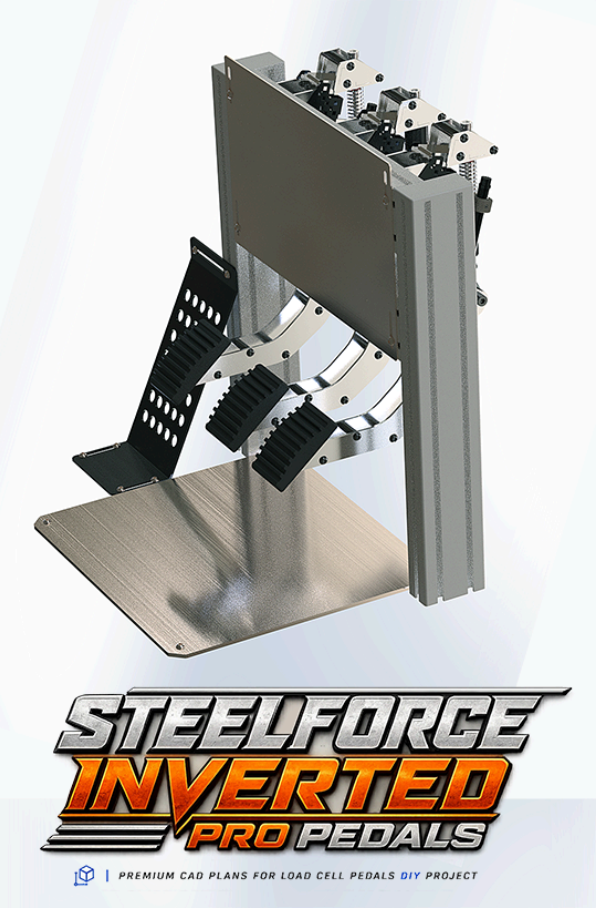

Is the Aesthetic Cover mandatory for the assembly?

No! The Cover **("Fixed Part Cover")** is purely optional. It was designed to give the pedal set a "Pro-Racing" look. The pedals are 100% structurally functional without it. You can choose not to install it for a more "industrial/raw" look.

Is there a specific software required to calibrate the Load Cells?

It depends on your electronics. If you use an Arduino with our recommended sketch, you can use **Windows Joystick**, **DIVIEW** or **FreeJoy** for calibration. If you choose a Leo Bodnar or AliExpress Plug & Play board, they are recognized as standard Windows Game Controllers and can be calibrated directly in-game or via Windows settings.

To calibrate your pedal set, feel free to follow **our Youtube guide here**.

Recommended Load Cell Weights

- **Brake Pedal:** We recommend a **100-120kg Load Cell**. This provides the necessary overhead for high-pressure trail braking and a realistic "stiff" racing feel.
- **Throttle & Clutch Pedals:** A **20kg Load Cell** is ideal. Since these pedals are travel-based, a 20kg sensor offers extreme precision and durability without requiring excessive leg force.

Load Cell Dimensions

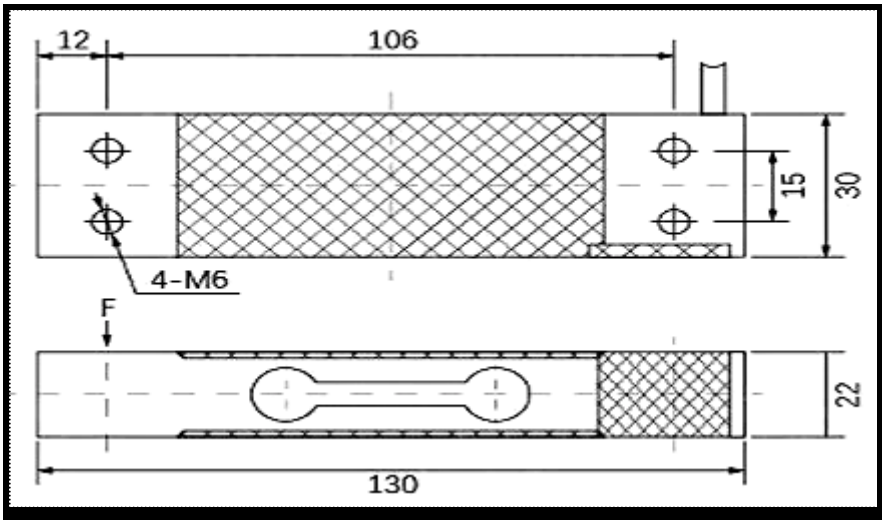

Is the hydraulic damper required?

No, the pedals work perfectly with the included spring and elastomer system. The Hydraulic Damper is an **optional upgrade** for those seeking a more "viscous" and realistic hydraulic feel on the pedals. The same goes for **bass shakers**.

What kind of dampers can I use?

The pedals are designed to be compatible with two types of dampers:

1. **Standard Gas Struts:** Affordable and effective for consistent resistance.
2. **Adjustable Hydraulic Dampers:** For those who want to fine-tune the "viscous" damping effect to their exact preference.

How do I prevent damaging the hydraulic dampers?

To ensure the longevity of your dampers, please follow these three critical rules:

1. **Perfect Alignment:** Ensure the actuator rod is perfectly straight during the stroke. It should not deflect left or right when pressure is applied.
2. **Structural Integrity:** The **"Hydraulic Damper Support"** part must be printed with **100% infill** to handle the mechanical load without flexing.
3. **Mechanical Stops:** This is the most important step. Your pedal's physical travel must be limited by the **"Fixed Part" stop (the M6x40 spacer)** *before* the hydraulic damper reaches its internal end-of-stroke. **Never use the gas damper as a mechanical stop.** Forcing the pedal against a fully compressed damper will lead to immediate failure.

4. For the screws securing the Rodend and which screws onto the M6x40 fitting, **we recommend using a thread-locking compound** to prevent them from **coming loose** due to vibration. This adhesive.

Recurring problems and their solutions

First of all, we invite you to carefully check your soldering, as well as the installation of the Joystick and HX711 libraries.

Issue: I got an error message when compiling my sketch.

- Use another USB cable (a data transfer cable)
- Change the USB port
- Connect the USB board directly to the PC
- Make sure you have chosen the right PORT and the right Board in the Arduino software ("Tools" menu).

Issue: My load cell pressure is reversed

Edit a line of the Arduino sketch, you need to remove or add the **–** just before ***scale***

Issue: I have a dead zone when pressing my load cell

Slightly adjust the tightness of the four M4 and M5 lock nuts which support the loadcell.

Issue: There is a lack of responsiveness on my load cell, a slight delay.

The HX711 sensor needs a slight modification; a connection needs to be cut and an image reconnected. Here's an image to help you:

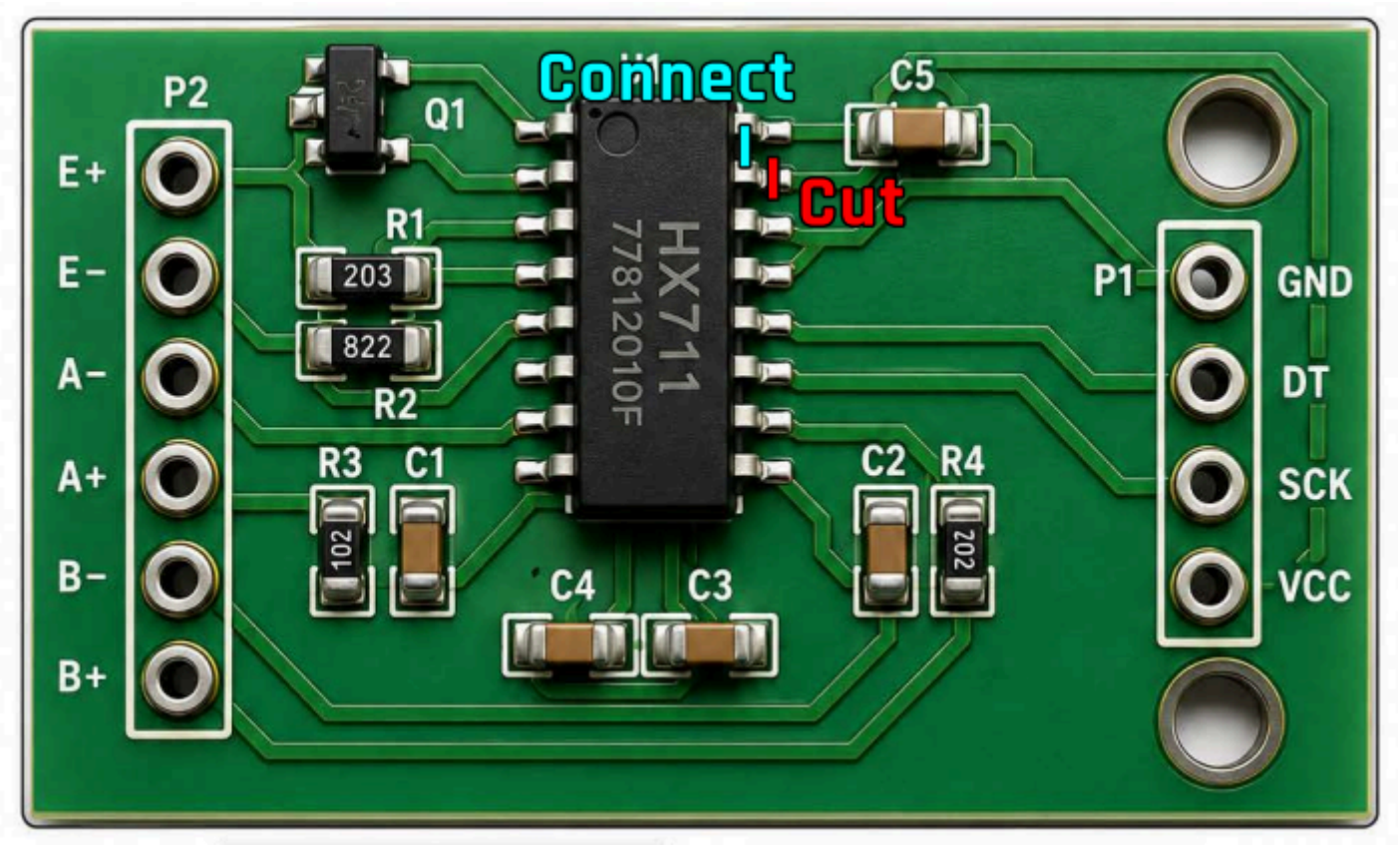

And a video: https://www.youtube.com/watch?v=0cxS-a837bY

What are the recommended dimensions for dampers, springs and rubbers?

To ensure a perfect fit with the internal mechanisms, please follow these specifications when sourcing your hardware:

- **Hydraulic/Gas Damper:**
  - **Maximum Outer Diameter:** Ø15mm
  - **Maximum Length:** 140 mm
- **Springs:**
  - **Minimum Inner Diameter:** Ø8mm (to slide freely over the M8 rods).
- **Elastomers (Brake Rubbers):**
  - **Minimum Inner Diameter:** Ø8mm
  - **Maximum Outer Diameter:** Ø35mm (to fit within the pedal housing/washers).

Which parts need to be bent?

Only the cover plate (decorative) and the brackets for the pedal rests need to be bent. Rest assured, these are purely optional parts and are not required for the pedal unit to function. The bends are simple (90°).

What are the thicknesses and tolerances of the stainless steel plates?

The thickness is generally 3 mm, though there are some that are 5 mm and 2 mm thick.

The tolerance is 0,2 mm.

What fasteners are required?

Here is the list of hardware needed to build a pedal; simply multiply the quantities by two or three if you wish to make two or three pedals. The list does not include the hydraulic cylinder or the bass shaker, which are optional parts.

- M5x20 Countersunk Bolt - Quantity 2
- M5x16 Bolt - Quantity 2
- M5 Lock Nuts - Quantity 6
- M6x12 Bolt - Quantity 26
- M6x16 Bolt - Quantity 12
- M8x45 Bolt - Quantity 1
- M8 Lock Nut - Quantity 2
- M6x55 Bolt - Quantity 1
- M6 Lock Nut - Quantity 1
- M6 Washer - Quantity 14

- M6x40 Threaded Round Spacers - Quantity 13 (3D Printed Alternative is available)
- 8mm Drill Bit Collar - Quantity 1 (3D Printed Alternative is available)
- M8 Female Rodend - Quantity 1 (3D Printed Alternative is available)
- M8x180 Half Thread Bolt - Quantity 1
    - Note: M8x170 is also accepted
- M5x40 Bolt - Quantity 2
- M5x35 Bolt - Quantity 2
- Self-Lubricating Bearing - Quantity: 2

Which profiles are recommended for assembly?

Which profiles are recommended for assembly?

- For the sides, we recommend **two 40x80 profiles with a length of 500 mm**.
- For mounting the pedal set, we recommend **two 40x80 profiles with a length of 400 mm**..

Don't forget the 4040 angle brackets (minimum of 6 required).

What is the difference between "Fixed Part B" and "Fixed Part A"

The fixed section of the pedal assembly consists of two parts:
- Fixed Part A - 3mm Thickness - Quantity 1
- Fixed Part B - 3mm Thickness - Quantity 1

Part A is the side plate that supports the hydraulic damper.
Part B is the side plate that does **not support** a hydraulic damper.

If you do not wish to use a hydraulic damper, you should use two of Part B; if you wish to use hydraulic dampers on both sides, you can use two of Part A for your pedal.

We recommend using the standard configuration: Part A + Part B.